Audio Op Amp

Materials:

- 3x 100 μF polarized capacitors
- 1x 100 nF capacitor
- Mini speaker
- LM386 op amp
- 2x 2 kΩ resistors
- 9V battery
- 3.5 mm audio plug

How it works:

The circuit uses the LM386 audio amplifier to increase the amplitude of a low-power audio signal so it can drive a mini speaker. The audio signal is supplied through the 3.5 mm audio plug and first passes through a coupling capacitor (100 μF), which blocks any DC component while allowing the AC audio signal to enter the amplifier.

Inside the LM386, the input signal is amplified according to the configured gain, which can be adjusted using external components such as capacitors connected across specific pins. The amplified output signal is then sent through another capacitor (100 μF) to the speaker. This output capacitor prevents DC voltage from reaching the speaker while allowing the amplified AC signal to pass, producing sound.

Additional capacitors in the circuit help stabilize the power supply and reduce noise. The 100 nF capacitor acts as a bypass capacitor to filter high-frequency noise, while another 100 μF capacitor helps smooth fluctuations in the 9V supply. The resistors are used to control input signal levels and improve circuit stability.

Overall, the circuit takes a small audio signal, amplifies it using the LM386, and converts it into audible sound through the speaker.

Pinout:

Pin 1 (GAIN): With pin 8, it sets the amplifier voltage gain.	Pin 8 (GAIN): With pin 1, it sets the amplifier voltage gain.
Pin 2: Inverting input (-).	Pin 7 (BYPASS): For noise reduction and stability. Connected to a capacitor.
Pin 3: Non-inverting input (+). Connected to an audio signal input.	Pin 6 (Vs): To power supply.
Pin 4: Connected to ground (GND).	Pin 5 (Vout): Output.

Inside the chip:

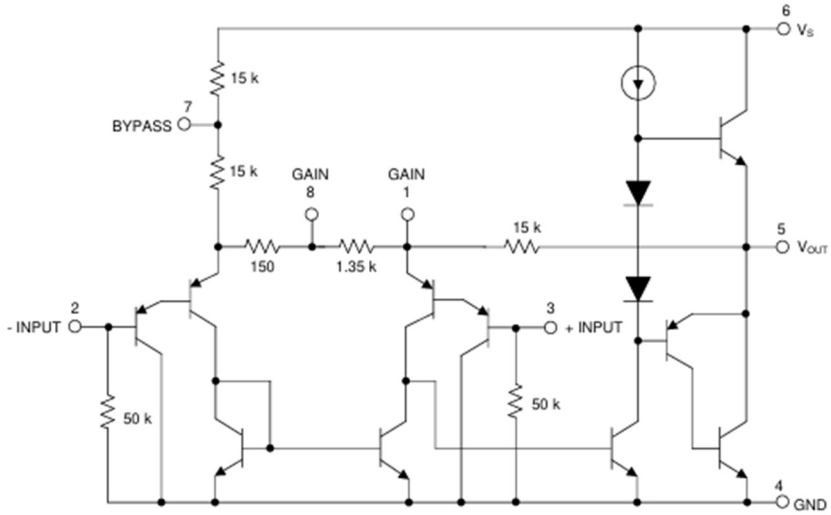

- Input Stage: Differential amplifier for small-signal input.
- Gain Stage: Provides default gain of 20, adjustable via pins 1 & 8
- Output Stage: Class AB push-pull amplifier.
- Bias Network: Sets internal DC reference (≈½ Vcc).
- Feedback Network: Provides stability and gain control.
- Power Output: Up to ~700 mW into 8 Ω at 9 V.
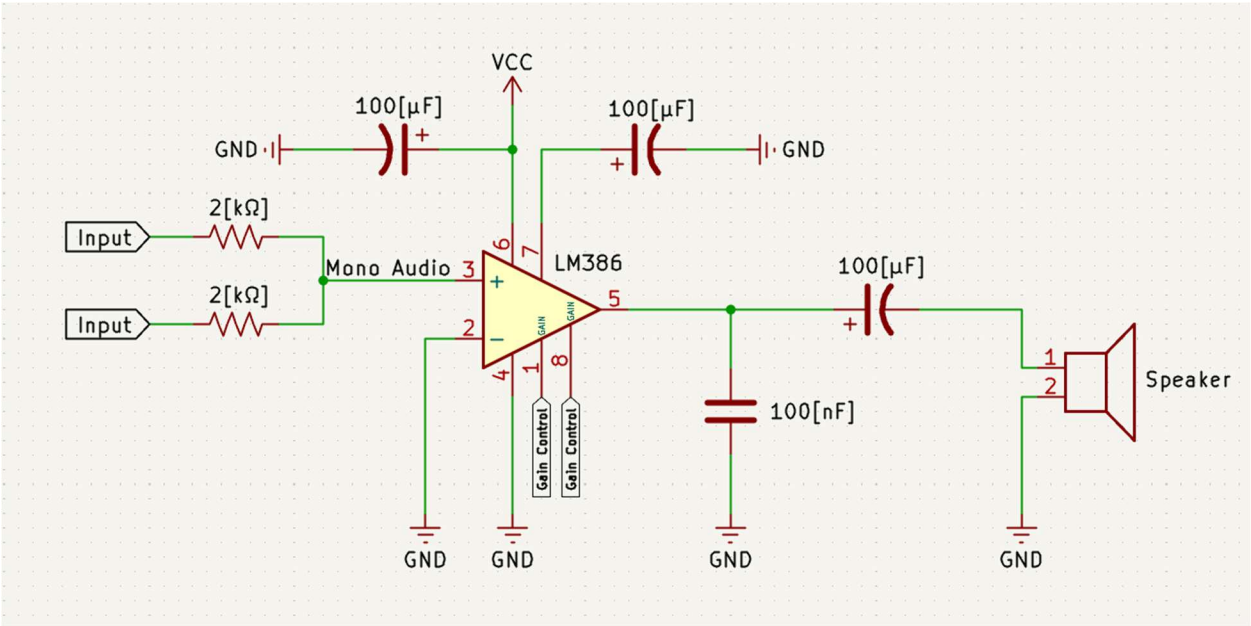
Schematic (KiCAD):